Pepper C1 Module User Manual

Manual version: V1.6[1]
10/06/2025

Table of Contents

1. Introduction 2

1.1 Device Overview 2

2. Electrical specification 3

2.1 Absolute maximum ratings 3

2.2 Operating conditions 3

2.3 DC characteristics (V_{DD} = 3.3V, T_S = 25 °C) 3

2.4 Current consumption (3.3V on pins 1 and 8) 4

2.5 Current consumption (3.3V on pin 8 and 5V on pin 1) 5

3. Getting started 6

3.1 IO and peripherals 6

3.1.1 Pinout description 7

3.2 Typical connection and usage 8

4. Mechanical dimension 11

5. Configuration and functional description 13

6. Revision history 13

[1] The newest User manual can be found on our website: https://eccel.co.uk/wp-content/downloads/Pepper_C1/Pepper_C1_FCC_Module_user_manual.pdf

1. Introduction

1.1 Device Overview

Features

- Low cost RFID Reader with MIFARE® Classic® in 1K, 4K memory, ICODE, MIFARE Ultralight®, MIFARE DESFire® EV1/EV2, MIFARE Plus® support
- Wireless connectivity:
  - Wi-Fi: 802.11 b/g/n
  - 2.4GHz wireless communication (WPAN)
  - can be disabled by the user
- Built in Web Interface
- Over-the-Air lifetime updates
- Command interface via UART and TCP sockets
- UART baud rate up to 921600 bps
- 6 configurable GPIOs
- Stand-alone mode (polling)
- IoT interfaces: MQTT, WebSocket, REST API, TCP Client/Server
- High transponder read and write speed
- -25°C to 85°C operating range
- Multiple internal reference voltages
- RoHS compliant
- FCC version available

Applications

- Access control
- Monitoring goods
- Approval and monitoring consumables
- Pre-payment systems
- Managing resources
- Contact-less data storage systems
- Evaluation and development of RFID systems

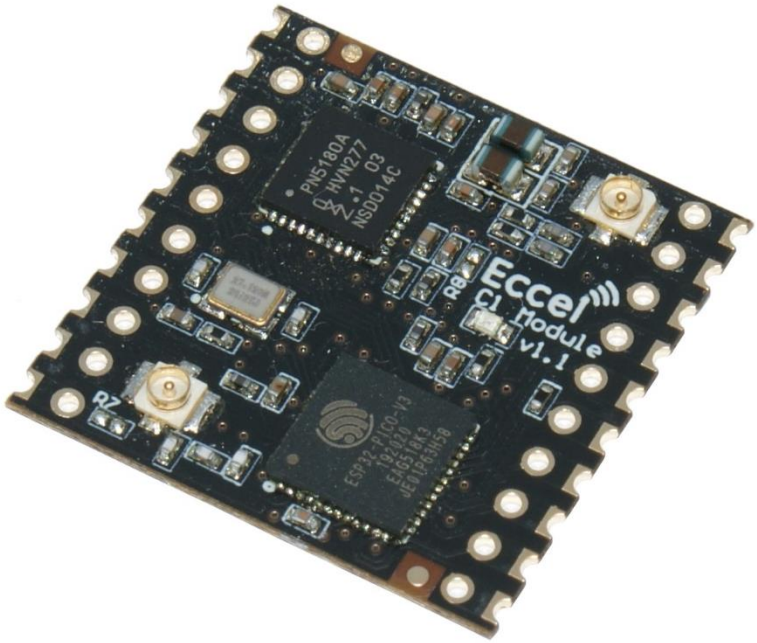

Description

The Pepper C1 module is one of the family of Eccel Technology Ltd (IB Technology) products with wireless connectivity by Wi-Fi 802.11b/g/n and WPAN (2.4GHz). Thanks to this, the customer receives free lifetime Over-the-Air updates, and of course the communication protocol can be used over TCP instead of traditional UART/USB interface. Combining these features with standalone mode provides a ready to use device in many applications "straight out of the box." In standalone mode, the module can be easily integrated with IoT systems thanks to many IoT protocols like MQTT, REST API, TCP sockets and more.

So, this is an ideal design choice if the user wishes to add RFID capability to their design quickly and without requiring extensive RFID and embedded software expertise and time. An advanced and powerful 32-bit microcontroller handles the RFID configuration setup and provides the user with a powerful yet simple command interface to facilitate fast and easy read/write access to the memory and features of the various transponders supported by this module.

2. Electrical specification

2.1 Absolute maximum ratings

Stresses beyond the absolute maximum ratings listed in the table below may cause permanent damage to the device. These are stress ratings only, and do not refer to the functional operation of the device that should follow the recommended operating conditions.

Symbol	Parameter	Min	Max	Unit
T_S	Storage temperature	-40	+125	°C
T_A	Ambient temperature	-40	+85	°C
V_{DDMAX}	Supply voltage (Pin number 8)	3	3.6	V

Table 2-1. Absolute maximum ratings

2.2 Operating conditions

Symbol	Parameter	Min	Typ.	Max	Unit
T_S	Operating temperature	-25	25	+85	°C
H	Humidity	5	60	95	%
V_{DD}	Supply voltage (Pin number 8)	3	3.3	3.6	V
V_{RFID}	RFID supply voltage (Pin number 1)	3	3.3/5	5.5	V

Table 2-2. Operating conditions

2.3 DC characteristics (V_{DD} = 3.3V, T_S = 25 °C)

Symbol	Parameter	Min	Typ.	Max	Unit
V_{IH}	High-level input voltage (Any GPIO)	0.75 x V_{DD}	-	V_{DD} + 0.3	V
V_{IL}	Low-level input voltage (Any GPIO)	0	-	0.3 x V_{DD}	V
V_{OH}	High-level output voltage (Any GPIO)	0.8 x V_{DD}	-	-	V
V_{OL}	Low-level output voltage (Any GPIO)	-	-	0.3 x V_{DD}	V

Table 2-3. DC characteristics

2.4 Current consumption (3.3V on pins 1 and 8)

Symbol			Parameter	Typ.	Max	Unit
Wi-Fi enabled	Access Point mode	$I_{PN_RFOFF_AP}$	RF field off (AP)	135	155	mA
		$I_{PN_RFON_AP}$	RF field on (AP) (500 ms polling)	145	165	mA
			RF field on (AP) (200 ms polling)	155	175	mA
	Station mode	$I_{PN_RFOFF_STA}$	RF field off (STA)	60	80	mA
		$I_{PN_RFON_STA}$	RF field on (STA) (500 ms polling)	70	90	mA
			RF field on (STA) (200 ms polling)	80	100	mA
Wi-Fi Off	I_{PN_RFOFF}		RF field off	55	75	mA
	I_{PN_RFON}		RF field on (500 ms polling)	60	80	mA
			RF field on (200 ms polling)	65	85	mA
I_{DSM}			Deep Sleep Mode	90	100	uA

Table 2-4. Current consumption

2.5 Current consumption (3.3V on pin 8 and 5V on pin 1)

Symbol			Parameter	V_{DD} = 3.3V		V_{RFID} = 5V		Unit
				Typ.	Max	Typ.	Max	
Wi-Fi enabled	Access Point mode	$I_{PN_RFOFF_AP}$	RF field off (AP)	135	155	0*	0*	mA
		$I_{PN_RFON_AP}$	RF field on (AP) (500 ms polling)	136	156	12	22	mA
			RF field on (AP) (200 ms polling)	137	157	25	35	mA
	Station mode	$I_{PN_RFOFF_STA}$	RF field off (STA)	60	80	0*	0*	mA
		$I_{PN_RFON_STA}$	RF field on (STA) (500 ms polling)	62	82	12	22	mA
			RF field on (STA) (200 ms polling)	63	83	25	35	mA
Wi-Fi Off	I_{PN_RFOFF}		RF field off	55	75	0*	0*	mA
	I_{PN_RFON}		RF field on (500 ms polling)	57	77	12	22	mA
			RF field on (200 ms polling)	58	78	25	35	mA
I_{DSM}			Deep Sleep Mode	90	100	0*	0*	uA

Table 2-5. Current consumption

* 50 nA

3. Getting started

3.1 IO and peripherals

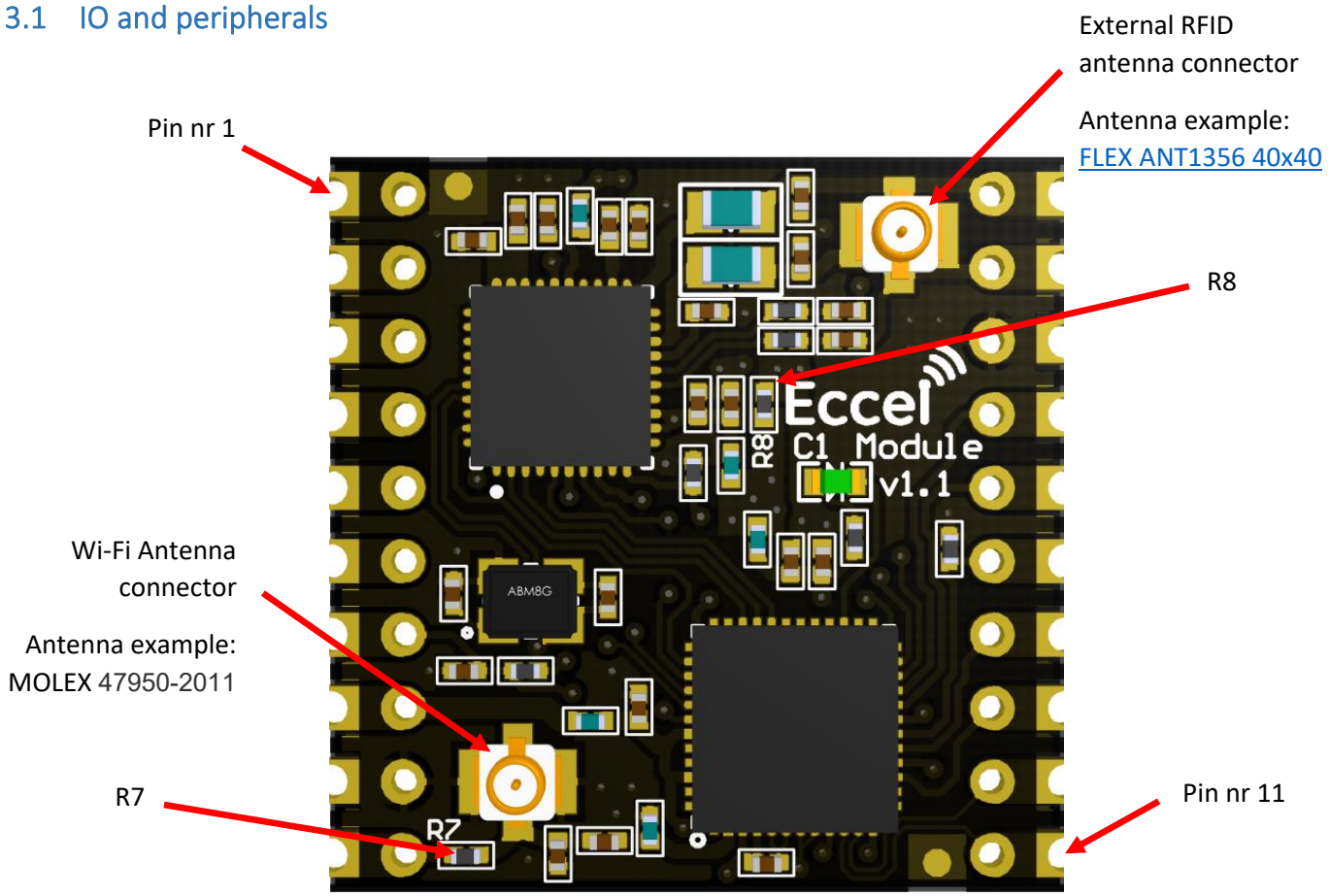

R7 – normally not populated because the default antenna connection is to the I-PEX connector for the user to add an external Wi-Fi antenna onto. This resistor is used for connecting an external Wi-Fi antenna to pin nr 10 when on-board I-PEX connector is not used. Recommended value 0 Ohm. When a 0 Ohm resistor is added to R7 by the user, the antenna connection is then routed to pin 10 for simple connection to a track antenna for example on the user's motherboard.

R8 – normally not populated. Can be used if RFID section will be powered from main 3.3V on pins nr 8 and nr 9. Recommended value 0 Ohm. For best RFID performance, Eccel recommend that the RFID antenna circuit is powered from a separate 5V supply via pin 1 of the module. However, if a 0 Ohm resistor is fitted to R8, then the module will use its 3.3V power supply connection from Pin 8 to also power the RFID antenna circuit. RFID performance will be reduced in this case.

3.1.1 Pinout description

Number	Name	Description
1	V_{RFID}	5V regulated dc supply recommended. RFID section power supply pin. Can be left unconnected when R8 is populated. RFID will be then powered from main 3.3V supply applied to pin no. 8
2	GPIO2	UART2 data transmit pin
3	GPIO0	Button pin
4	GPIO4	UART2 data receive pin
5	TX0	UART0 data transmit pin
6	RX0	UART0 data receive pin
7	RESET	Active low reset pin
8	V_{DD}	Main power supply – recommended value 3.3V
9	GND	Ground
10	Wi-Fi ANT	Pin for external antenna connection. Available when R7 is populated. Do not use when on-board antenna connector is used
11	GPI34	General Purpose Input pin no. 34/Analog/**For future use**
12	GPI35	General Purpose Input pin no. 34/Analog/**For future use**
13	GPIO26	General Purpose Input Output pin no. 26
14	GPIO14	General Purpose Input Output pin no. 14
15	GPIO12	UART2 RS485 DE pin
16	GPIO13	UART2 RS485 RE pin
17	GPIO15	General Purpose Input Output pin no. 15
18	GND	Ground for RFID Antenna. Can be connected to the main ground when on-board RFID antenna is used
19	RFID ANT2	RFID antenna signal no. 2. Do not use when on-board antenna connector is used.
20	RFID ANT1	RFID antenna signal no. 1. Do not use when on-board antenna connector is used.

Note:

PIN 3 / Button has the same functionality as BUTTON on the Pepper C1 USB/UART boards. It is used to put the device in rescue mode or perform a factory reset.

In the normal state, it should be left floating or pulled up. To emulate a button press, it should be connected to the ground. However, please never connect this pin to the GND on power-up, as the board will not boot.

When the device is working, you can:

- Press button / connect to the GND for 3 seconds - enable access point mode with default settings temporarily – it can be useful eg, when you set up the device not to use Wi-Fi, but then you want to enable Wi-Fi temporarily
- Press the button / connect to the GND for 10 seconds – perform a factory reset and set all device settings to defaults.

The device blinks every second when the button is held.

3.2 Typical connection and usage

The Pepper C1 Module can be connected to a host (computer or another device) using UART0. In order to connect the module to a computer, a USB to UART converter will be required.

By default, this UART0 interface can be used for communication using the binary protocol described below.

The Reader also has UART2 available. Using this connection, the user can view output logs which contain additional information about temporary executing commands. The default configuration is: baud: 115200, Data: 8 bit, Parity: none, Stop bits: 1 bit, Flow Control: none. Data lines can be configured to work using any free GPIO's available on the module.

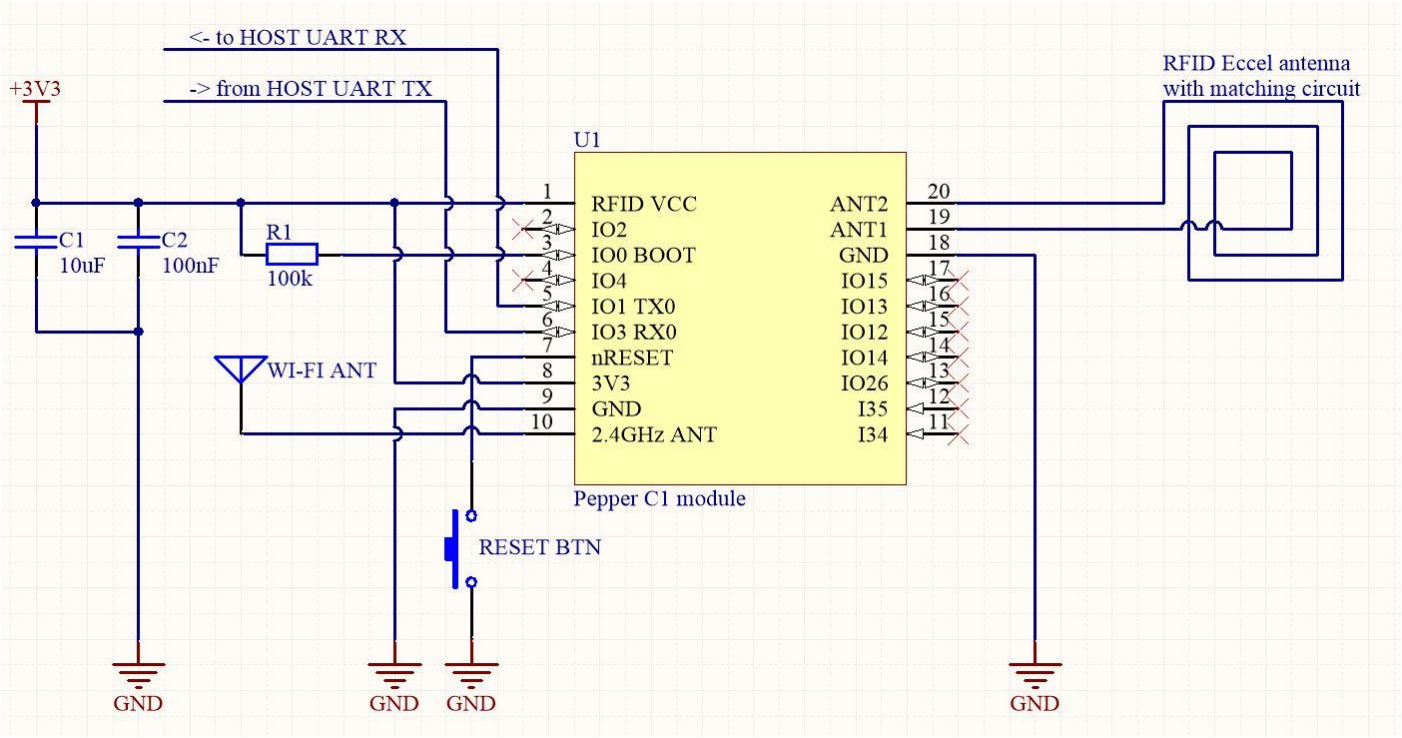

Figure 1. Typical connection

Eccel provides the C1 module baseboard for fast prototyping:
https://eccel.co.uk/product/pepper-c1-module-baseboard/

4. Mechanical dimension

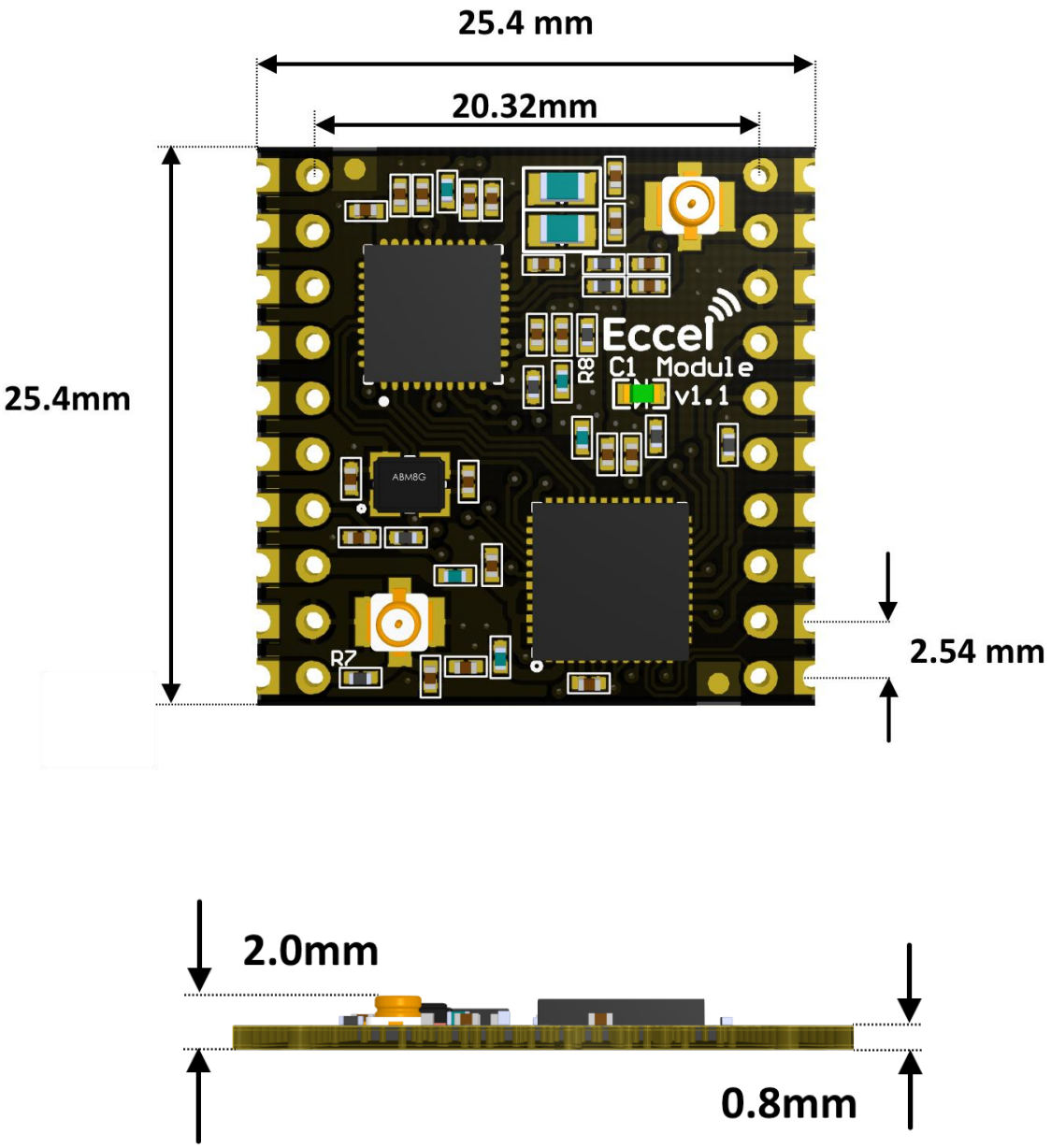

Figure 4-1 Pepper C1 module dimension

All dimensions in mils.

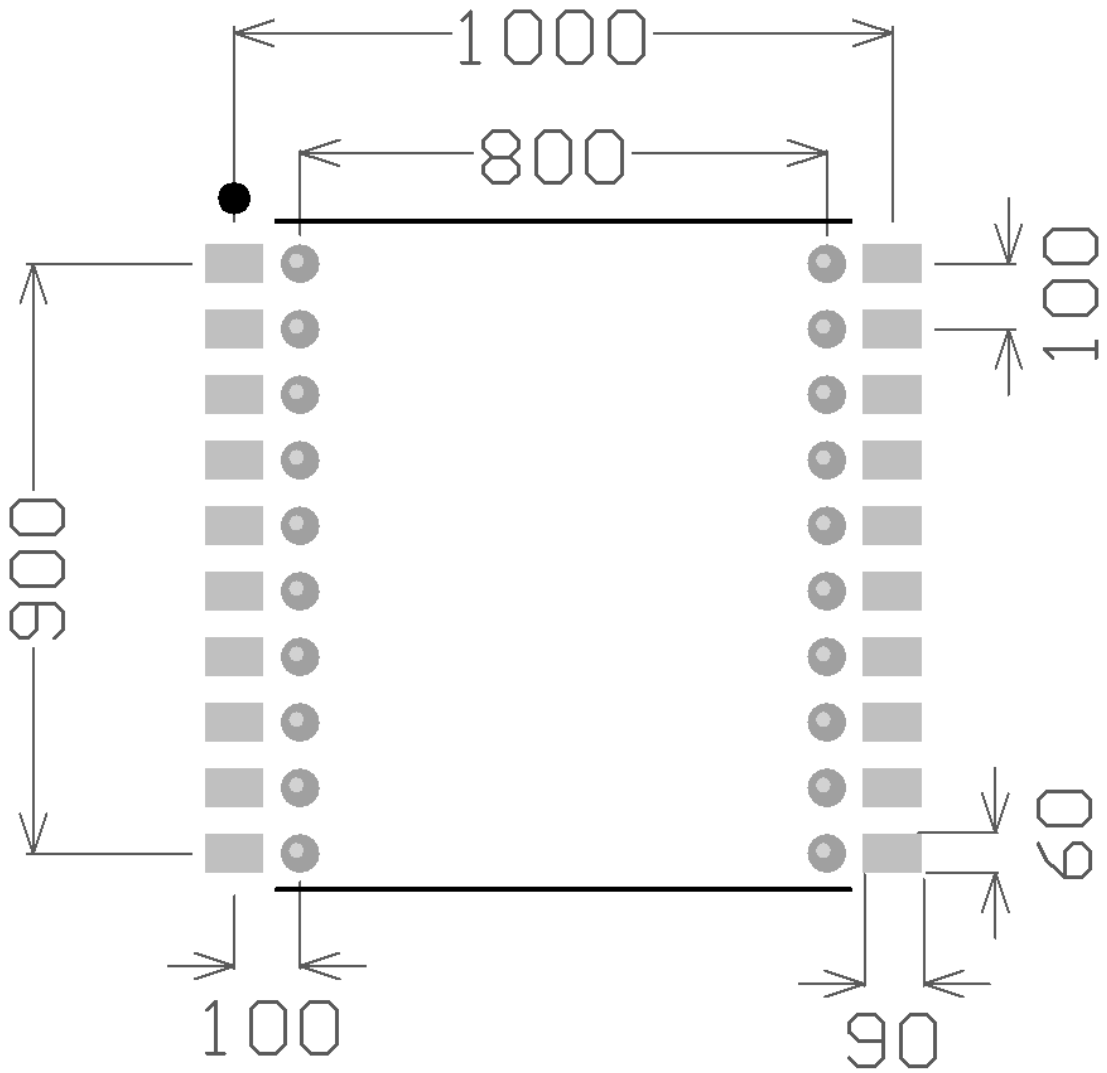

Figure 2. Recommended footprint

The footprint in the Altium Designer / Circuit Studio format can be downloaded from this link:
http://eccel.co.uk/wp-content/downloads/Pepper_C1/Pepper_C1_module_Altium_lib.zip

5. Configuration and functional description

Here is the document describing configuration, communication protocol, commands and all functions of the Pepper C1 module:
https://eccel.co.uk/wp-content/downloads/Pepper_C1/C1_software_manual.pdf

Eccel provides a variety of free tools & libraries ready to be downloaded from this link:
https://eccel.co.uk/support-free-libraries/

6. Revision history

Revision	Date	Changes
1.6	10-Jun-2025	Section 3.2 updated
1.5	03-Jul-2024	Section 1.1 updated
1.4	20-May-2024	Recommended footprint added
1.3	2-Apr-2024	First release after splitting software and hardware description
1.2	29-Mar-2024	Section 2.4 updated, Section 2.5 added
1.1	9-Mar-2023	Section 1 updated
1.0	1-Mar-2021	Initial release

MIFARE, MIFARE Ultralight, MIFARE Plus, MIFARE Classic, and MIFARE DESFire are trademarks of NXP B.V.

No responsibility is taken for the method of integration or final use of the C1 modules

More information about the C1 module and other products can be found at the Internet site:

http://www.eccel.co.uk

or alternatively contact ECCEL Technology (IB Technology) by e-mail at:

sales@eccel.co.uk